2023

AP® Art History

Free-Response Questions

© 2023 College Board. College Board, Advanced Placement, AP, AP Central, and the acorn logo are registered trademarks of College Board. Visit College Board on the web: collegeboard.org.

AP Central is the official online home for the AP Program: apcentral.collegeboard.org.

ART HISTORY

SECTION II

Time—2 hours

6 Questions

Directions: You have two hours to answer the six questions in this section. Questions 1 and 2 are long essay questions, and you are advised to spend one hour to answer these two questions. Questions 3 through 6 are short essay questions, and you are advised to spend 15 minutes on each. The proctor will announce when each time interval has elapsed, but you may proceed freely from one question to another.

Read the questions carefully. You can receive full credit only by directly answering all aspects of the question.

You may use any of the blank space provided with the questions in this orange booklet for scratch work or to organize your responses. However, no credit will be given for anything written in this booklet. **You will only earn credit for what you write in the separate Free Response booklet.**

When providing your answers in the Free Response booklet, you must answer each question in essay form. An outline or bulleted list is not acceptable.

Note: This exam uses the chronological designations B.C.E. (before the common era) and C.E. (common era). These designations correspond to B.C. (before Christ) and A.D. (anno Domini), which are used in some art history resources.

GO ON TO THE NEXT PAGE.

© 2023 College Board.
Visit College Board on the web: collegeboard.org.

Question 1 refers to the following image.

© Peter Willi / Bridgeman Images

GO ON TO THE NEXT PAGE.

© 2023 College Board.
Visit College Board on the web: collegeboard.org.

1. The work shown is the Reliquary of Sainte-Foy, a sculptural representation of a Christian holy figure, created in France circa the late tenth through early eleventh century.

   Select and completely identify another work that serves as a representation of a holy figure or deity from a different religion. You may select a work from the list below or any other relevant work of art.

   Describe the subject matter of both the Reliquary of Sainte-Foy and your selected work.

   Using specific visual evidence from each work, explain at least two similarities and/or differences in how the representation of the holy figure or deity expresses the beliefs of each religion.

   Explain one similarity or difference in how both works of art are used in the practices of the religions with which they are associated. Use specific contextual evidence from both the Reliquary of Sainte-Foy and your selected work to support your explanation.

   When identifying the work you select, you should try to include all of the following identifiers: title or designation, name of the architect and/or culture of origin, date of creation, and materials. You will earn credit for the identification if you provide at least two accurate identifiers, but you will not be penalized if any additional identifiers you provide are inaccurate. If you select a work from the list below, you must include at least two accurate identifiers beyond those that are given.

   Shiva as Lord of Dance (Nataraja)
   Coyolxauhqui Stone

Begin your response to this question at the top of a new page in the separate Free Response booklet and fill in the appropriate circle at the top of each page to indicate the question number.

GO ON TO THE NEXT PAGE.

© 2023 College Board.
Visit College Board on the web: collegeboard.org.

Note: There are no images provided for Question 2.

2. Throughout history, artists have created works of art that represent important members of society in order to honor them.

   Select and completely identify one of the objects from the list below or any other relevant work from Africa (1100–1980 C.E.) that was created to honor an important individual.

   Explain how the object chosen honors a specific important member of the African society in which it was created.

   In your response, you should do the following:

   - Provide two accurate identifiers for the work of art you have selected.
   - Respond to the prompt with an art historically defensible claim or thesis that establishes a line of reasoning.
   - Support your claim with at least two examples of relevant visual and/or contextual evidence.
   - Explain how the evidence supports the claim.
   - Corroborate or qualify your claim by explaining relevant connections, providing nuance, or considering diverse views.

   When identifying the work you select, you should try to include all of the following identifiers: title or designation, artist, culture of origin, date of creation, and materials. You will earn credit for the identification if you provide at least two accurate identifiers, but you will not be penalized if any additional identifiers you provide are inaccurate. If you select a work from the list below, you must include at least two accurate identifiers beyond those that are given.

   Ndop (portrait figure) of King Mishe miShyaang maMbul
   Wall plaque, from Oba's palace
   Portrait mask (*Mblo*)

Begin your response to this question at the top of a new page in the separate Free Response booklet and fill in the appropriate circle at the top of each page to indicate the question number.

GO ON TO THE NEXT PAGE.

© 2023 College Board.
Visit College Board on the web: collegeboard.org.

Question 3 refers to the following image.

Courtesy of The Metropolitan Museum of Art

3. The work shown is a print by Katsushika Hokusai, *Ejiri in Suruga Province (Sunshū Ejiri)*, from the series Thirty-six Views of Mount Fuji (Fugaku sanjūrokkei), created circa 1830–1832 C.E.

   Describe at least two specific visual characteristics of the work shown.

   Using at least two examples of specific visual evidence, explain how the artist creates a sense of movement in the work.

   Using specific contextual evidence, explain how this work is characteristic of other Japanese prints (*ukiyo-e* prints) from this period.

Begin your response to this question at the top of a new page in the separate Free Response booklet and fill in the appropriate circle at the top of each page to indicate the question number.

GO ON TO THE NEXT PAGE.

© 2023 College Board.
Visit College Board on the web: collegeboard.org.

Question 4 refers to the following images.

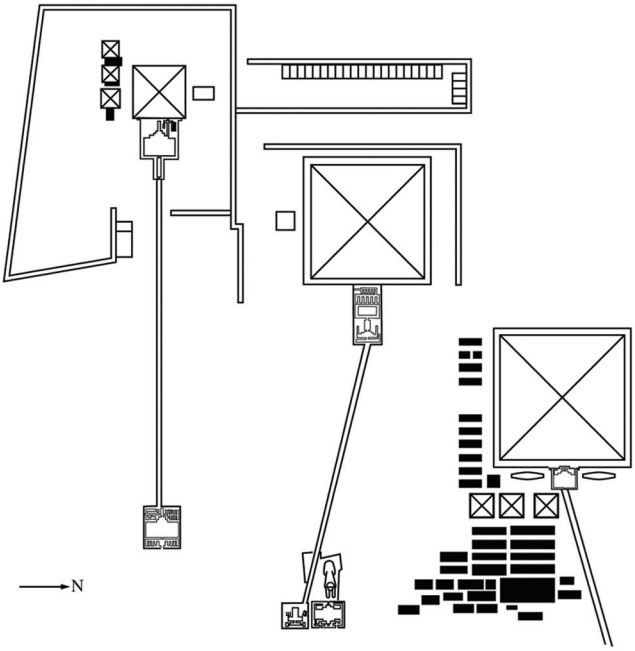

© Roger Wood/Getty Images

4. The images show a plan and a view of the Great Pyramids (Menkaura, Khafre, Khufu) and Great Sphinx of Giza, Egypt, created circa 2550–2490 B.C.E. in Old Kingdom Egypt.

   Describe at least one visual characteristic of the layout of the architectural complex shown.

   Describe the original function of the architectural complex shown.

   Using two examples of specific contextual evidence, explain how the religious practices of Old Kingdom Egypt influenced the design of the architectural complex and/or its monuments.

   Using specific visual or contextual evidence, explain why the Great Pyramids and Great Sphinx of Giza are understood as an expression of power and authority in Old Kingdom Egypt.

Begin your response to this question at the top of a new page in the separate Free Response booklet and fill in the appropriate circle at the top of each page to indicate the question number.

GO ON TO THE NEXT PAGE.

© 2023 College Board.
Visit College Board on the web: collegeboard.org.

Question 5 refers to the following image.

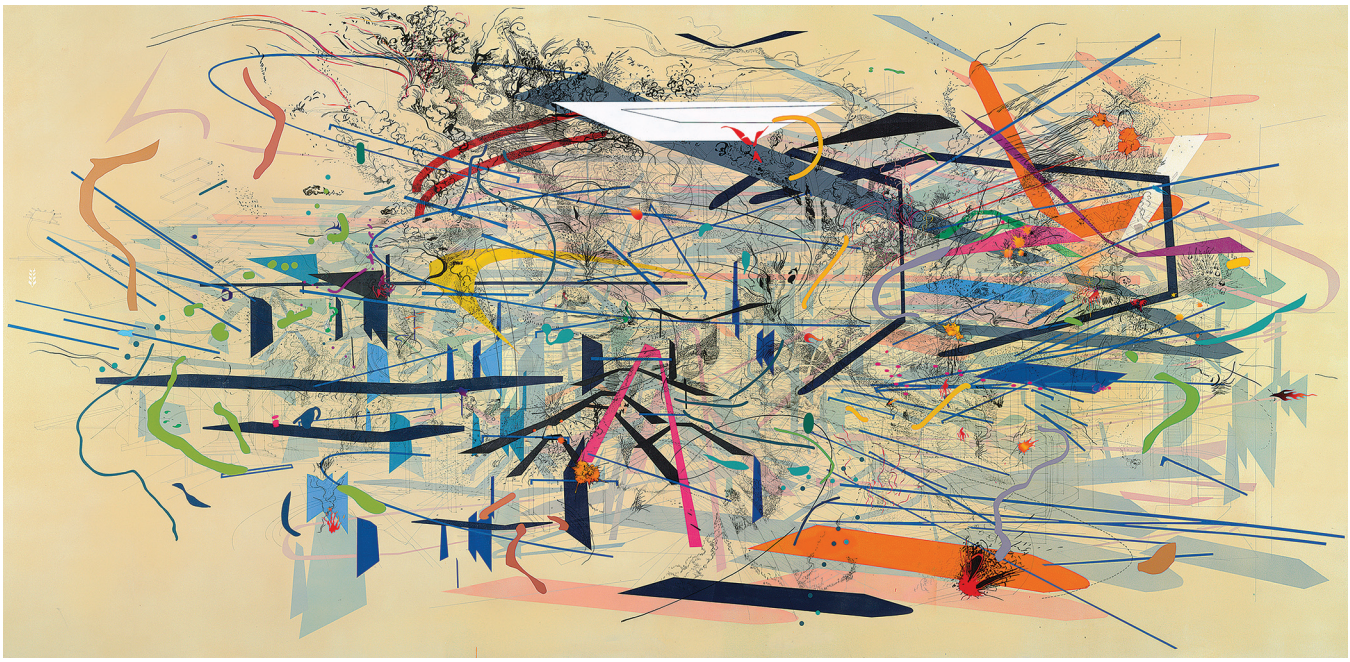

Private Collection / Bridgeman Images / Courtesy of the artist

5. Correctly attribute the work shown to the artist who created it.

   Using at least two examples of specific visual evidence, justify the attribution by describing relevant similarities between the work shown and other works created by the same artist.

   Using specific visual evidence, explain how the artist creates a sense of dynamic movement in the work shown.

   Using specific visual or contextual evidence, explain how the artist references architectural space in their work.

Begin your response to this question at the top of a new page in the separate Free Response booklet and fill in the appropriate circle at the top of each page to indicate the question number.

GO ON TO THE NEXT PAGE.

© 2023 College Board.
Visit College Board on the web: collegeboard.org.

Question 6 refers to the following image.

© Fine Art Images/ age fotostock

6. The work shown is an illustration from *The Results of the First Five-Year Plan* made by Vavara Stepanova in 1932.

   Describe at least two visual and/or contextual elements of the work shown.

   Using specific visual evidence, explain how the work shown is characteristic of art in the first half of the twentieth century C.E.

   Using specific visual evidence, explain how the work shown deviates from established traditions of Western visual art.

   Using specific contextual evidence, explain how the artist's choices about style or content in the work represent the ideas and values of the society in which it was made.

Begin your response to this question at the top of a new page in the separate Free Response booklet and fill in the appropriate circle at the top of each page to indicate the question number.

GO ON TO THE NEXT PAGE.

© 2023 College Board.
Visit College Board on the web: collegeboard.org.

STOP

END OF EXAM

© 2023 College Board.
Visit College Board on the web: collegeboard.org.